LESSON MAKER PRO

Circle Symmetry Lab

Use reflections and full turns to evaluate trig functions.

HIGH SCHOOL · HSF-TF.A.4

CCSS.Math.Content.HSF-TF.A.4 "(+) Use the unit circle to explain symmetry (odd and even) and periodicity of trigonometric functions."

NAME _____ DATE _____

REFLECTION AND ROTATION RULES

On the unit circle, reflecting an angle x across the x-axis changes (cos x, sin x) to (cos x, -sin x), so cos(-x)=cos x and sin(-x)=-sin x. Rotating one full turn returns to the same point, so sin(x+2pi)=sin x and cos(x+2pi)=cos x.

WORKED EXAMPLE

The figure shows a 150° central angle from a unit-circle diagram. Use symmetry to find cos(-5pi/6).

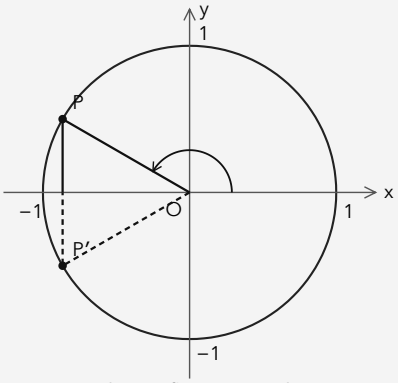

150° and its reflection; radius = 1

1. The positive angle is 5pi/6, and its reflection is -5pi/6.
2. Cosine is even, so cos(-5pi/6)=cos(5pi/6).
3. On the unit circle, cos(5pi/6)=-sqrt(3)/2.

Answer: -sqrt(3)/2

PRACTICE 6 problems

1 Use odd symmetry to find sin(-pi/4).

ANSWER _____

2 Use even symmetry to find cos(-pi/3).

ANSWER _____

3 Write 7pi/6 as -5pi/6+2pi. Then find sin(7pi/6).

ANSWER _____

4 Use periodicity to find cos(11pi/3).

ANSWER _____

5 The figure shows a 90° central angle on a unit circle. Find the sine of the angle reflected across the x-axis.

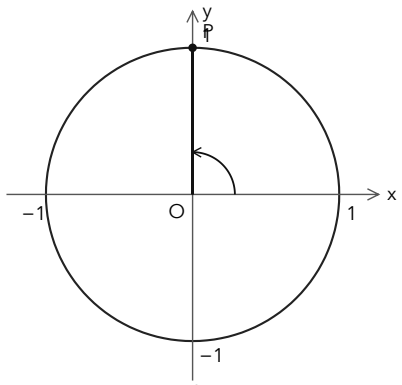

90°; radius = 1

ANSWER _____

6 For each function, state whether it is even or odd: sin x and cos x.

ANSWER _____

_____

APPLY IT Show your work

1 The plotted curve approximates y=sin t using closely spaced samples; horizontal units are π/2. Use odd symmetry to find the position at t=−π/2 and explain the coordinate sign change.

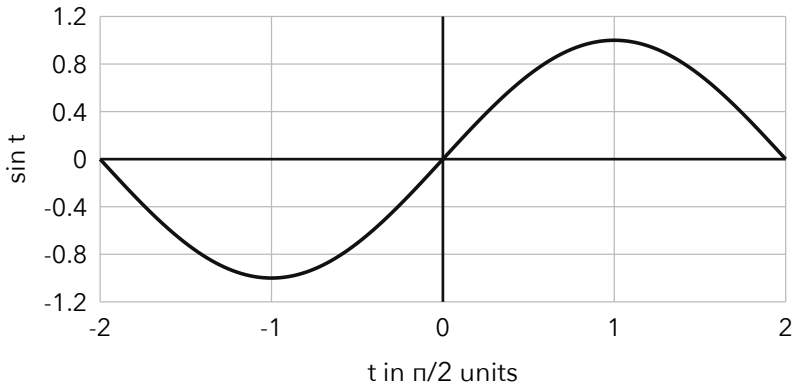

2 A virtual-reality app places a moving light at (cos theta, sin theta) on a unit circle. The light is set to theta=9pi/2. What is its coordinate, and why does it match the coordinate at pi/2?

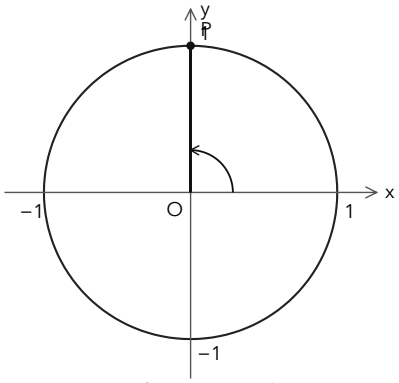

π/2 + two full turns; radius = 1

CHALLENGE One step up

Let g(x)=sin x+cos x. Find g(-x). Then decide whether g is even, odd, or neither, and give its fundamental period. Justify the sine/cosine parity rules by reflecting a general point (a,b) on the unit circle across the x-axis, and justify their 2π period by a full turn.

ANSWER KEY

Circle Symmetry Lab

HIGH SCHOOL · HSF-TF.A.4

PART 1 · PRACTICE

#	PROBLEM	ANSWER
1	Use odd symmetry to find sin(-pi/4).	**-sqrt(2)/2**
2	Use even symmetry to find cos(-pi/3).	**1/2**
3	Write 7pi/6 as -5pi/6+2pi. Then find sin(7pi/6).	**-1/2**
4	Use periodicity to find cos(11pi/3).	**1/2**
5	The figure shows a 90° central angle on a unit circle. Find the sine of the angle reflected across the x-axis.	**-1**
6	For each function, state whether it is even or odd: sin x and cos x.	**sin x is odd; cos x is even.**

PART 2 · APPLY IT

1. **-1** At t=-pi/2, the graph has y=-1. This also follows from sin(-pi/2)=-sin(pi/2).
2. **(0, 1); 9pi/2=pi/2+4pi, so the angle differs by two full turns.** Subtract 4pi from 9pi/2 to get pi/2. Full turns return the point to the same unit-circle coordinate.

CHALLENGE

g(-x)=cos x-sin x; g is neither even nor odd; its fundamental period is 2pi. Reflection gives(a,−b): cosine is unchanged and sine changes sign. A full turn returns both coordinates; g=√2sin(x+π/4) has fundamental period2π.

Accept equivalent exact forms, including coordinates written as (0,1). For the challenge, accept a correct justification that g(-x) is not equal to g(x) or -g(x).